DRAWING FOR CUSTOMER

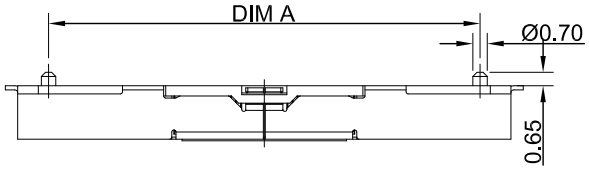

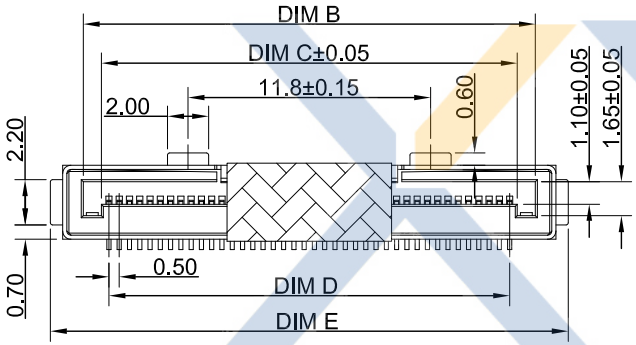

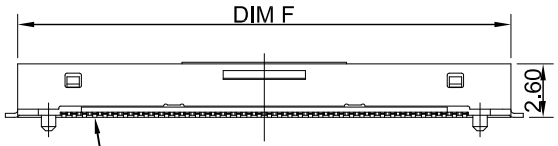

SOLDER TAIL COPLANARITY ± 0.1 mm

KB502-XX X S V X A

- Pin No.
- 包装方式：
  - T:TUBE（管装）
  - R:REEL（卷装）
  - P：PE （袋装）
- S:SMT / D:DIP
- R:Right Angle / V:Vertical
- Mold No.
- Version

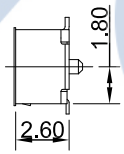

■Specifications :
- ●Current : Rating : 0.3A AC/DC
- ●Voltage Rating : 50V AC/DC
- ●Contact Resistance : 80mΩ Max.
- ●Dielectnic Withstanding Voitage: 150V AC/DC
- ●Insulation Resistance: 100MΩ MIN.
- ●Operating Temperature: -55°C to +85°C

■Material:
- ●Terminal : Copper alloy
  Plating : contact area 5u" Gold ,other area G/F over all 50u" Nicket under plated
- ●Shell : Stainless steel
- ●Housing: Thermoplastic UL94V-0
- ●Color : black

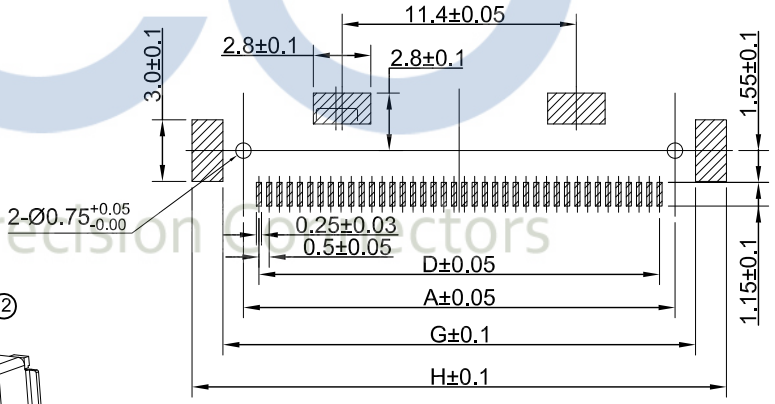

PCB LAYOUT

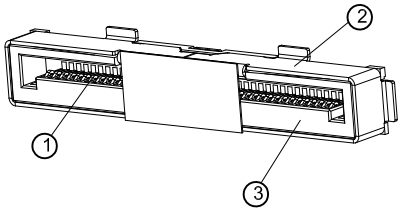

Pin No.	A	B	C	D	E	F	G	H
20P	11.00	12.00	10.24	9.50	15.20	14.00	13.00	16.00
30P	16.00	17.00	15.24	14.50	20.20	19.00	18.00	21.00
40P	21.00	22.00	20.24	19.50	25.20	24.00	23.00	26.00

DATE 日期	VER 版本	CHANGE HISTORY 變更歷史	CHANGED NAME 修改後料號	DRAWING 變更者
2011-03-08	A		KB502-XXXSVXA	譚火秦

TOLERANCE 公 差: .X=±0.30, .XX=±0.20, .XXX=±0.10

DRAWING 設計者: 譚火秦
CHECKED 審查: 楊峰
APPROVED 核准: 譚宏

KB502-XXXSVXA
PART NO. 料號
DWG NO. 圖號: PE1101A
UNIT 單位: mm

XYCO PRECISION CONNECTORS
TEL: 0769-8297 9981/2/3 http://www.XYCO.com.cn

PRODUCT NAME 產品名稱: HONDA LVC PH0.5mm Wire To Board SMT Vertical Wafer