DRAWING FOR CUSTOMER

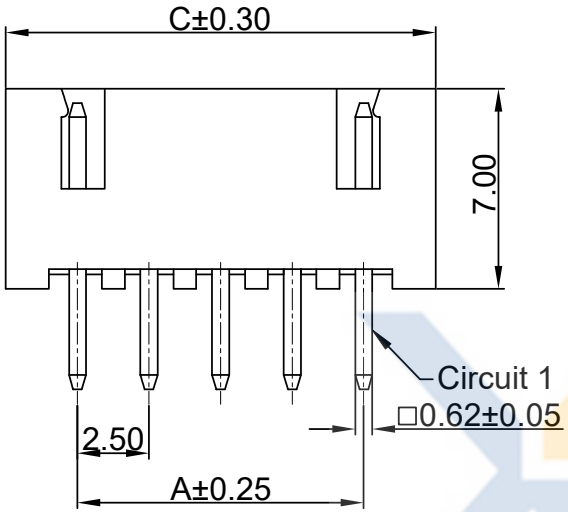

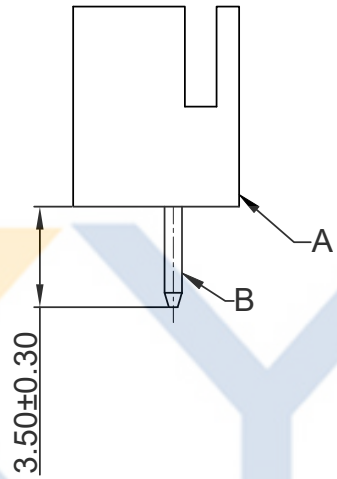

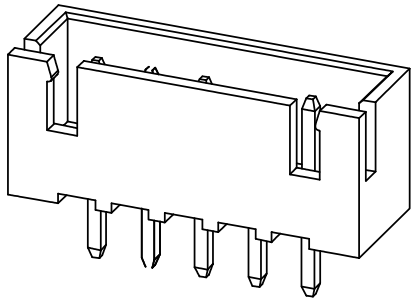

■SPEC.:
- ●Rated Voltage:250V AC,DC
- ●Rated Current:3A AC,DC
- ●Withstand Voltage:1000V AC/minute
- ●Contact Resistance:20mΩ max
- ●Insulation Resistance:1000MΩ min
- ●Temperature Range:-25℃~+85℃

■Material:
- ●Insulator(A):B1-PA66 UL94V-0;
  NB1-PA66 UL94V-0 HF.
  Color:WH-White
- ●Contact Pin(B):Brass
  Finish:Tin plated;over Nickel

KB952-XX X D V 6 A-XX- WH

- Pin No.
- 包装方式：
  T:TUBE（管装）
  R:REEL（卷装）
  P：PE （袋装）
- S:SMT
  D:DIP
- V:Vertical
- R:Right Angle
- Mold No.
- Version
- Material
- Color

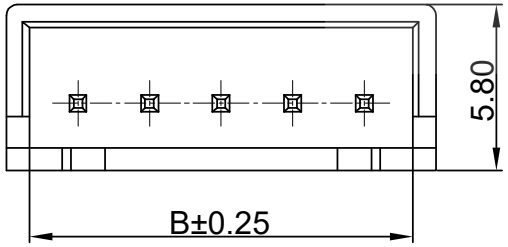

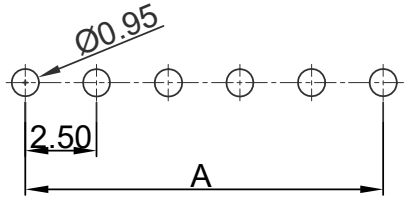

P.C.Board Layout

General Tolerance:±0.05

Poles	Dimensions(mm)		
	A	B	C
02	2.50	6.00	7.50
03	5.00	8.50	10.00
04	7.50	11.00	12.50
05	10.00	13.50	15.00
06	12.50	16.00	17.50
07	15.00	18.50	20.00
08	17.50	21.00	22.50
09	20.00	23.50	25.00
10	22.50	26.00	27.50
11	25.00	28.50	30.00
12	27.50	31.00	32.50
13	30.00	33.50	35.00
14	32.50	36.00	37.50
15	35.00	38.50	40.00
16	37.50	41.00	42.50
17	40.00	43.50	45.00
18	42.50	46.00	47.50

XYCO Precision Connectors

XYCO 东莞市轩业电子科技有限公司
TEL: 0769-8297 9981/2/3 http://www.XYCO.com.cn

DATE 日期	VER 版本	CHANGE HISTORY 變更歷史	CHANGED NAME 修改後料號	DRAWING 變更者
2016-11-18	A		KB952-XXXDV6A-XX-WH	Devin

TOLERANCE 公 差	DRAWING 設計者	Devin	KB952-XXXDV6A-XX-WH
.X=±0.30 .XX=±0.20 .XXX=±0.10	CHECKED 審查	Thomas	PART NO. 料號
	APPROVED 核准	William	DWG NO. 圖號 PE1712017A

UNIT 單位	mm	PRODUCT NAME 產品名稱	XH PH2.50mm Wire To Board DIP Vertical Wafer