DRAWING FOR CUSTOMER

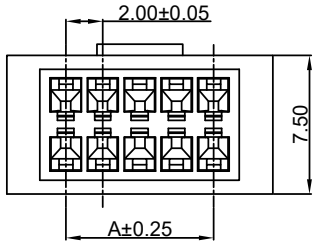

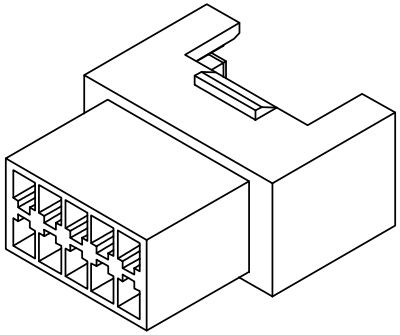

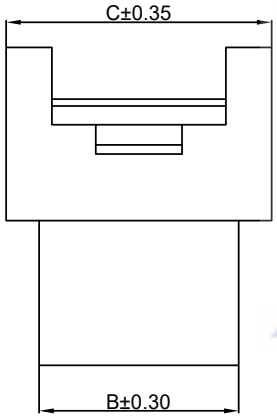

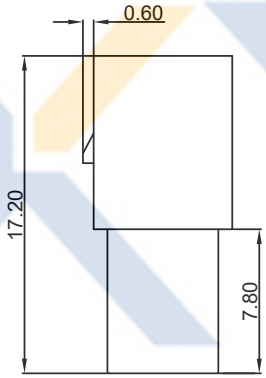

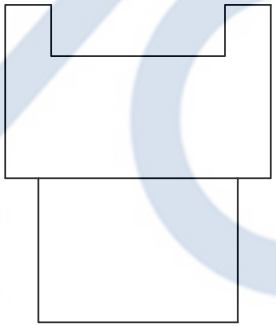

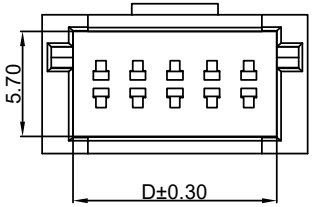

■SPEC.:
- ●Rated Voltage: 250V AC,DC
- ●Rated Current: 2A AC,DC
- ●Withstand Voltage: 800V AC/minute
- ●Contact Resistance: 20mΩ max
- ●Insulation Resistance: 1000MΩ min
- ●Temperature Range: -25°C~+85°C

■Material:
- ●Insulator:PA66 UL94V-0
  Color:White

KB936- D X X H L 6 A-F1

- D: Double row
- X: Pin No.
- X: Pin No.
- H: Housing
- L: With Lock
- 6: Mold No.
- A: Version
- F1: WTW

Poles	Dimensions(mm)			
	A	B	C	D
2X02P	2.00	4.80	8.40	5.00
2X03P	4.00	6.80	10.40	7.00
2X04P	6.00	8.80	12.40	9.00
2X05P	8.00	10.80	14.40	11.00
2X06P	10.00	12.80	16.40	13.00
2X07P	12.00	14.80	18.40	15.00
2X08P	14.00	16.80	20.40	17.00
2X09P	16.00	18.80	22.40	19.00
2X10P	18.00	20.80	24.40	21.00
2X11P	20.00	22.80	26.40	23.00
2X12P	22.00	24.80	28.40	25.00
2X13P	24.00	26.80	30.40	27.00
2X14P	26.00	28.80	32.40	29.00
2X15P	28.00	30.80	34.40	31.00
2X18P	34.00	36.80	40.40	37.00

XYCO Precision Connectors

XYCO 东莞市轩业电子科技有限公司
TEL: 0769-8297 9981/2/3 http://www.XYCO.com.cn

DATE 日期	VER 版本	CHANGE HISTORY 變更歷史	CHANGED NAME 修改後料號	DRAWING 變更者
2015-12-05	A		KB936-DXXHL6A-F1	Devin

TOLERANCE 公 差: .X=±0.30, .XX=±0.20, .XXX=±0.10

DRAWING 設計者	Devin	KB936-DXXHL6A-F1	
CHECKED 審查	Thomas	PART NO. 料號	
APPROVED 核准	William	DWG NO. 圖號	PE230701A

UNIT 單位: mm

PRODUCT NAME 產品名稱: PHB PH2.0mm Wire To Wire Housing-Female